UNIVERSITY OF CAMBRIDGE INTERNATIONAL EXAMINATIONS
General Certificate of Education
Advanced Subsidiary Level and Advanced Level

CANDIDATE NAME									
CENTRE NUMBER						CANDIDATE NUMBER				

5194827821

PHYSICS **9702/21**

Paper 2 AS Structured Questions **May/June 2013**

1 hour

Candidates answer on the Question Paper.

No Additional Materials are required.

READ THESE INSTRUCTIONS FIRST

Write your Centre number, candidate number and name on all the work you hand in.
Write in dark blue or black pen.
You may use a pencil for any diagrams, graphs or rough working.
Do not use staples, paper clips, highlighters, glue or correction fluid.
DO **NOT** WRITE IN ANY BARCODES.

Answer **all** questions.

Electronic calculators may be used.
You may lose marks if you do not show your working or if you do not use appropriate units.

At the end of the examination, fasten all your work securely together.
The number of marks is given in brackets [ ] at the end of each question or part question.

For Examiner's Use	
1	
2	
3	
4	
5	
6	
7	
Total	

This document consists of **13** printed pages and **3** blank pages.

DC (NF/CGW) 57978/4
© UCLES 2013

Data

speed of light in free space, $c = 3.00 \times 10^{8}\ \text{m s}^{-1}$

permeability of free space, $\mu_0 = 4\pi \times 10^{-7}\ \text{H m}^{-1}$

permittivity of free space, $\varepsilon_0 = 8.85 \times 10^{-12}\ \text{F m}^{-1}$

$$\left(\frac{1}{4\pi\varepsilon_0} = 8.99 \cdot\ 10^{9}\ \text{m F}^{-1}\right)$$

elementary charge, $e = 1.60 \times 10^{-19}\ \text{C}$

the Planck constant, $h = 6.63 \times 10^{-34}\ \text{J s}$

unified atomic mass constant, $u = 1.66 \times 10^{-27}\ \text{kg}$

rest mass of electron, $m_e = 9.11 \times 10^{-31}\ \text{kg}$

rest mass of proton, $m_p = 1.67 \times 10^{-27}\ \text{kg}$

molar gas constant, $R = 8.31\ \text{J K}^{-1}\ \text{mol}^{-1}$

the Avogadro constant, $N_A = 6.02 \times 10^{23}\ \text{mol}^{-1}$

the Boltzmann constant, $k = 1.38 \times 10^{-23}\ \text{J K}^{-1}$

gravitational constant, $G = 6.67 \times 10^{-11}\ \text{N m}^2\ \text{kg}^{-2}$

acceleration of free fall, $g = 9.81\ \text{m s}^{-2}$

© UCLES 2013

Formulae

uniformly accelerated motion, $s = ut + \frac{1}{2}at^2$
$v^2 = u^2 + 2as$

work done on/by a gas, $W = p\Delta V$

gravitational potential, $\phi = -\frac{Gm}{r}$

hydrostatic pressure, $p = \rho gh$

pressure of an ideal gas, $p = \frac{1}{3}\frac{Nm}{V}\langle c^2 \rangle$

simple harmonic motion, $a = -\omega^2 x$

velocity of particle in s.h.m., $v = v_0 \cos \omega t$
$v = \pm \omega \sqrt{(x_0^2 - x^2)}$

electric potential, $V = \frac{Q}{4\pi\varepsilon_0 r}$

capacitors in series, $1/C = 1/C_1 + 1/C_2 + \ldots$

capacitors in parallel, $C = C_1 + C_2 + \ldots$

energy of charged capacitor, $W = \frac{1}{2}QV$

resistors in series, $R = R_1 + R_2 + \ldots$

resistors in parallel, $1/R = 1/R_1 + 1/R_2 + \ldots$

alternating current/voltage, $x = x_0 \sin \omega t$

radioactive decay, $x = x_0 \exp(-\lambda t)$

decay constant, $\lambda = \frac{0.693}{t_{\frac{1}{2}}}$

© UCLES 2013

[Turn over

BLANK PAGE

© UCLES 2013

Answer **all** the questions in the spaces provided.

1 Energy is stored in a metal wire that is extended elastically.

(a) Explain what is meant by *extended elastically*.

.....

..... [2]

(b) Show that the SI units of energy per unit volume are $kg\,m^{-1}\,s^{-2}$.

[2]

(c) For a wire extended elastically, the elastic energy per unit volume X is given by

$$X = C\varepsilon^2 E$$

where C is a constant,
ε is the strain of the wire,
and E is the Young modulus of the wire.

Show that C has no units.

[3]

For Examiner's Use

2 **(a)** Distinguish between *mass and weight*.

mass: .....

.....

weight: .....

.....

[2]

(b) An object O of mass 4.9 kg is suspended by a rope A that is fixed at point P. The object is pulled to one side and held in equilibrium by a second rope B, as shown in Fig. 2.1.

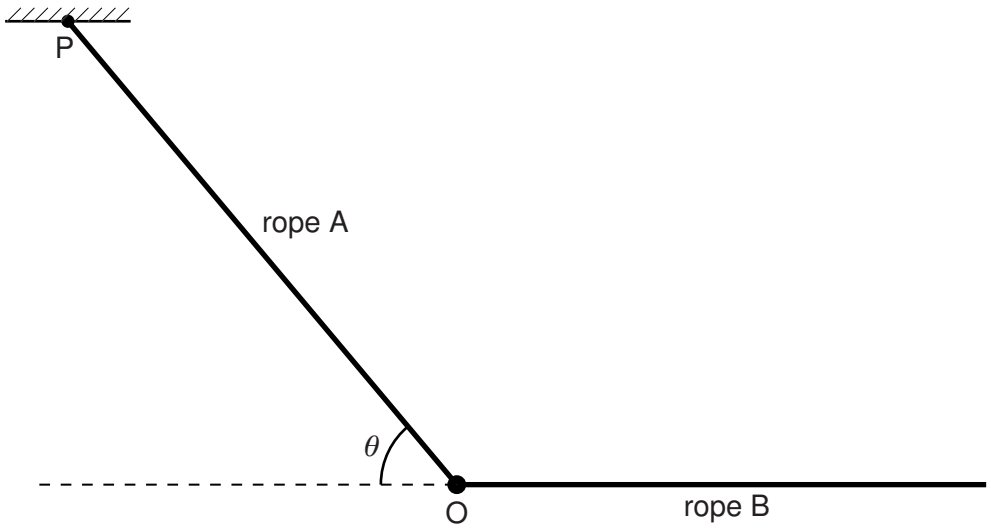

Fig. 2.1

Rope A is at an angle θ to the horizontal and rope B is horizontal. The tension in rope A is 69 N and the tension in rope B is *T*.

(i) On Fig. 2.1, draw arrows to represent the directions of all the forces acting on object O. [2]

© UCLES 2013

(ii) Calculate

For Examiner's Use

1. the angle θ,

θ = ...° [3]

2. the tension T.

T = ... N [2]

For Examiner's Use

3 **(a)** An object falls vertically from rest through air. State and explain the energy conversions that occur as the object falls.

.....

.....

.....

..... [3]

(b) A ball of mass 150 g is thrown vertically upwards with an initial speed of 25 m s^{-1}.

(i) Calculate the initial kinetic energy of the ball.

kinetic energy = ... J [3]

(ii) The ball reaches a height of 21 m above the point of release.

For the ball rising to this height, calculate

1. the loss of energy of the ball to air resistance,

energy loss = ... J [3]

2. the average force due to the air resistance.

force = ... N [2]

© UCLES 2013

For Examiner's Use

4 **(a)** Define *pressure*.

.....

..... [1]

(b) Use the kinetic model to explain the pressure exerted by a gas.

.....

.....

.....

.....

.....

..... [4]

(c) Explain whether the collisions between the molecules of an ideal gas are elastic or inelastic.

.....

.....

..... [2]

© UCLES 2013

[Turn over

For Examiner's Use

5 **(a)** State three conditions required for maxima to be formed in an interference pattern produced by two sources of microwaves.

1. .....

.....

2. .....

.....

3. .....

.....

[3]

(b) A microwave source M emits microwaves of frequency 12 GHz. Show that the wavelength of the microwaves is 0.025 m.

[3]

(c) Two slits S_1 and S_2 are placed in front of the microwave source M described in **(b)**, as shown in Fig 5.1.

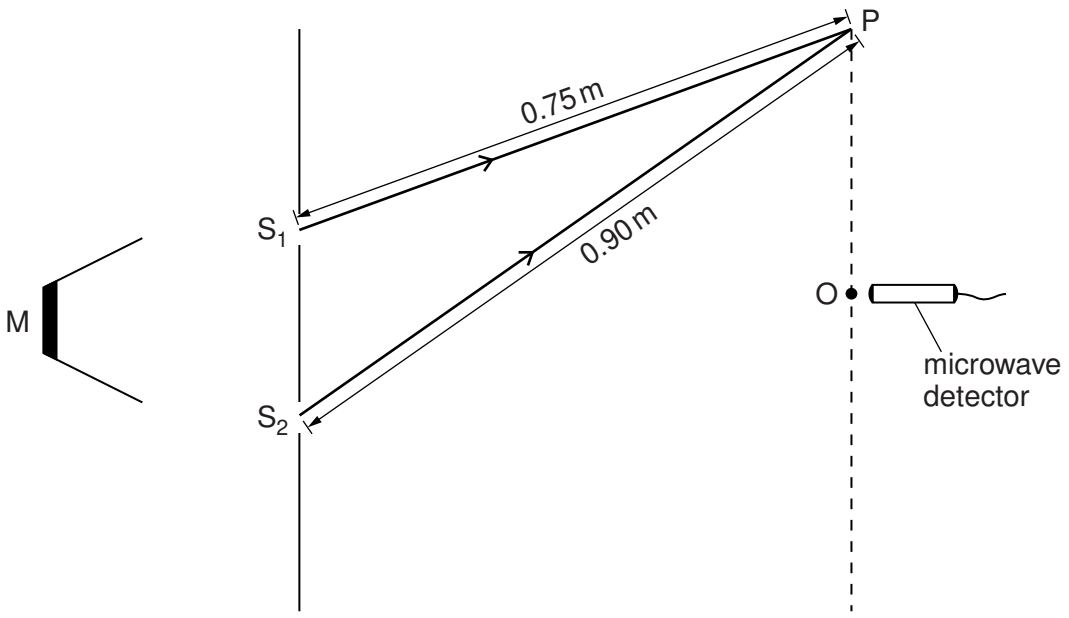

Fig. 5.1 (not to scale)

The distances S_1O and S_2O are equal. A microwave detector is moved from O to P. The distance S_1P is 0.75 m and the distance S_2P is 0.90 m.

The microwave detector gives a maximum reading at O.

For Examiner's Use

State the variation in the readings on the microwave detector as it is moved slowly along the line from O to P.

.....

.....

.....

.....

..... [3]

(d) The microwave source M is replaced by a source of coherent light.

State two changes that must be made to the slits in Fig. 5.1 in order to observe an interference pattern.

1. .....

2. .....
[2]

6 Two resistors A and B have resistances R_1 and R_2 respectively. The resistors are connected in series with a battery, as shown in Fig. 6.1.

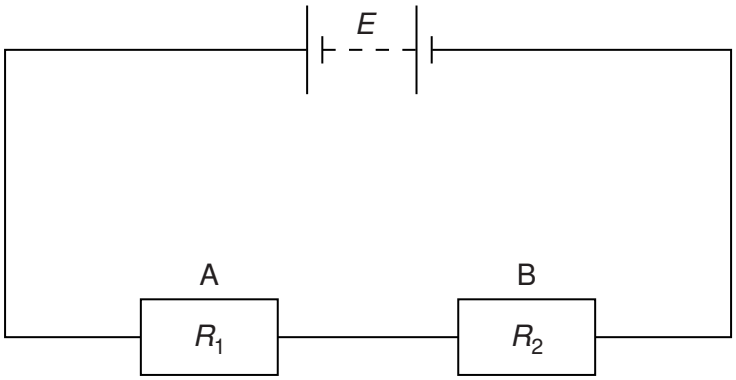

Fig. 6.1

The battery has electromotive force (e.m.f.) E and zero internal resistance.

(a) State the energy transformation that occurs in

(i) the battery,

.....

..... [1]

(ii) the resistors.

.....

..... [1]

(b) The current in the circuit is I.

State the rate of energy transformation in

(i) the battery,

..... [1]

(ii) the resistor A.

..... [1]

© UCLES 2013

(c) The resistors are made from metal wires. Data for the resistors are given in Fig. 6.2.

resistor	A	B
resistivity of metal	ρ	$\rho/2$
length of wire	l	l
diameter of wire	d	$2d$

Fig. 6.2

Use information from Fig. 6.2 to determine the ratio

$$\frac{\text{power dissipated in A}}{\text{power dissipated in B}}.$$

ratio = ... [3]

(d) The resistors A and B are connected in parallel across the same battery of e.m.f. E. Determine the ratio

$$\frac{\text{power dissipated in A}}{\text{power dissipated in B}}.$$

ratio = ... [2]

© UCLES 2013

For Examiner's Use

7 **(a)** Describe the two main results of the α-particle scattering experiment.

result 1: .....

.....

result 2: .....

.....

[3]

(b) Relate each of the results in **(a)** with the conclusions that were made about the nature of atoms.

result 1: .....

.....

result 2: .....

.....

[3]

BLANK PAGE

© UCLES 2013

BLANK PAGE

Permission to reproduce items where third-party owned material protected by copyright is included has been sought and cleared where possible. Every reasonable effort has been made by the publisher (UCLES) to trace copyright holders, but if any items requiring clearance have unwittingly been included, the publisher will be pleased to make amends at the earliest possible opportunity.

University of Cambridge International Examinations is part of the Cambridge Assessment Group. Cambridge Assessment is the brand name of University of Cambridge Local Examinations Syndicate (UCLES), which is itself a department of the University of Cambridge.

© UCLES 2013